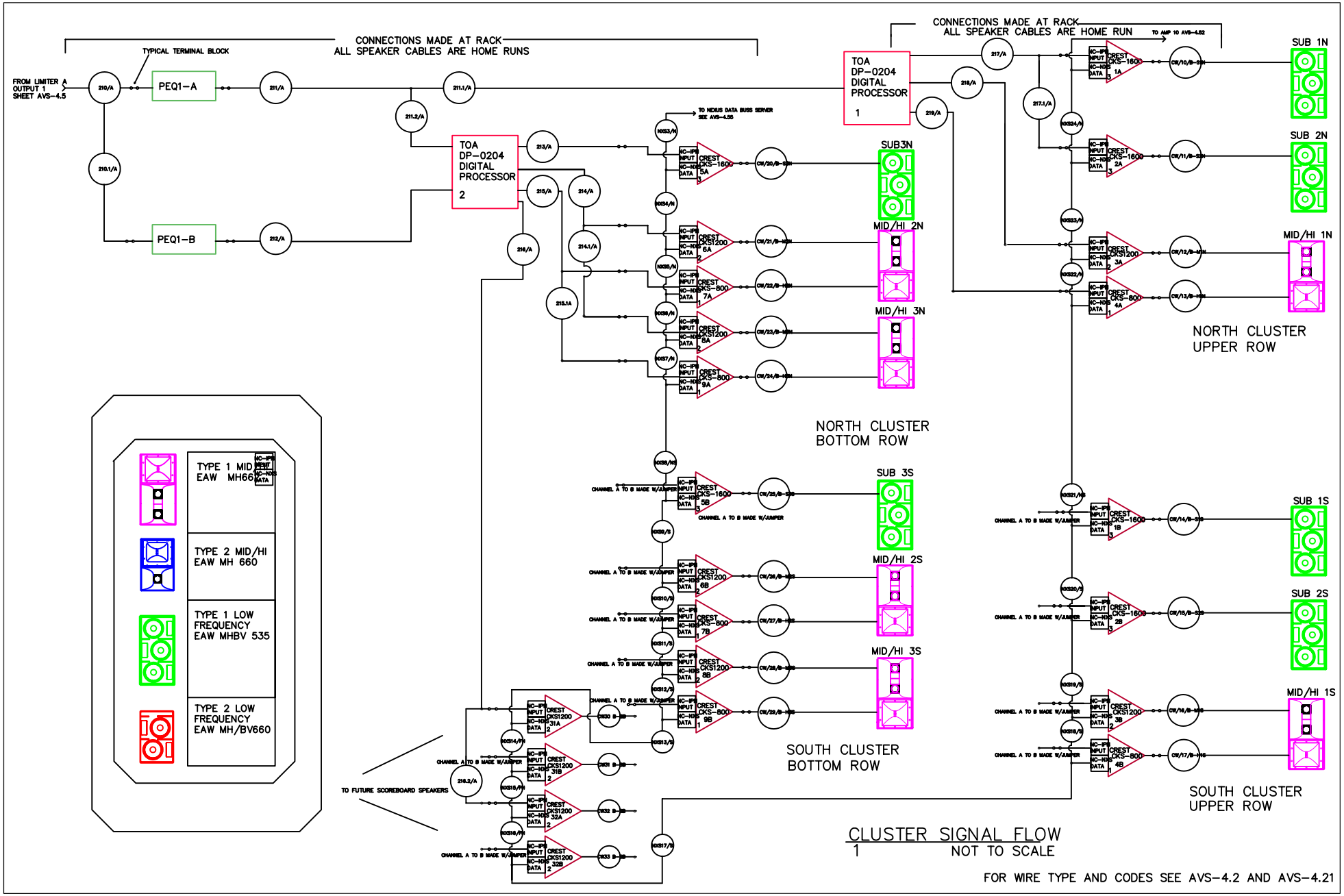


| SOUND REINFORCEMENT | |
|---|---|
| REVISIONS | DATE |
| R1 | 8/98 |
| R2 | 10/98 |
| AB1 | 10/99 |

PYRAMID

NEW ORLEANS SPORTS ARENA
LOUISIANA STADIUM AND EXPOSITION DISTRICT
NEW ORLEANS LOUISIANA
SHOP DRAWING SUBMITTAL

SHEET TITLE:
SOUND SYSTEM SIGNAL FLOW SOUTH/NORTH CLUSTERS

DRAWN BY: H.ALLISON
CHECKED BY: D. DRUCKER
DATE: 2-3/98
PROJECT NO. 0493
SHEET NO. AVS-4.51